California Faucets®

La Spezia™

Contemporary Dual Handle Wall Mount Pot Filler

K55-200-TG

Features

- *Available in 28 finishes including 13 PVD finishes*
- *All brass construction*
- *1/4 turn ceramic disc cartridges*
- *Dual jointed swing spout*
- *1/2" FIP inlet for quick connect*
- *Max flow rate: 4.0 gpm (15.1 L/min) at 60 psi*

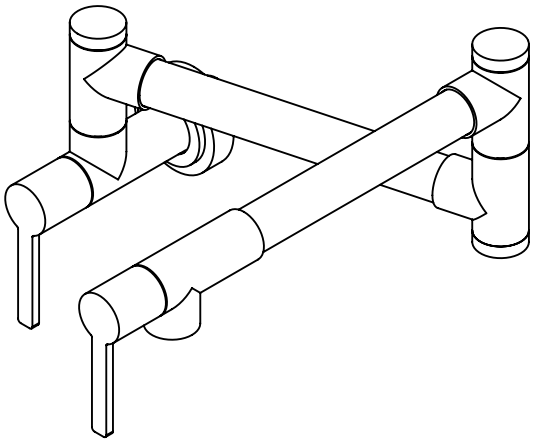

Codes/Standards Applicable

Product meets or exceeds the following:

- *ASME A112.18.1/CSA B125.1*
- *NSF 61, & NSF 372*
- *Commonwealth of MA*
- *ADA compliant*

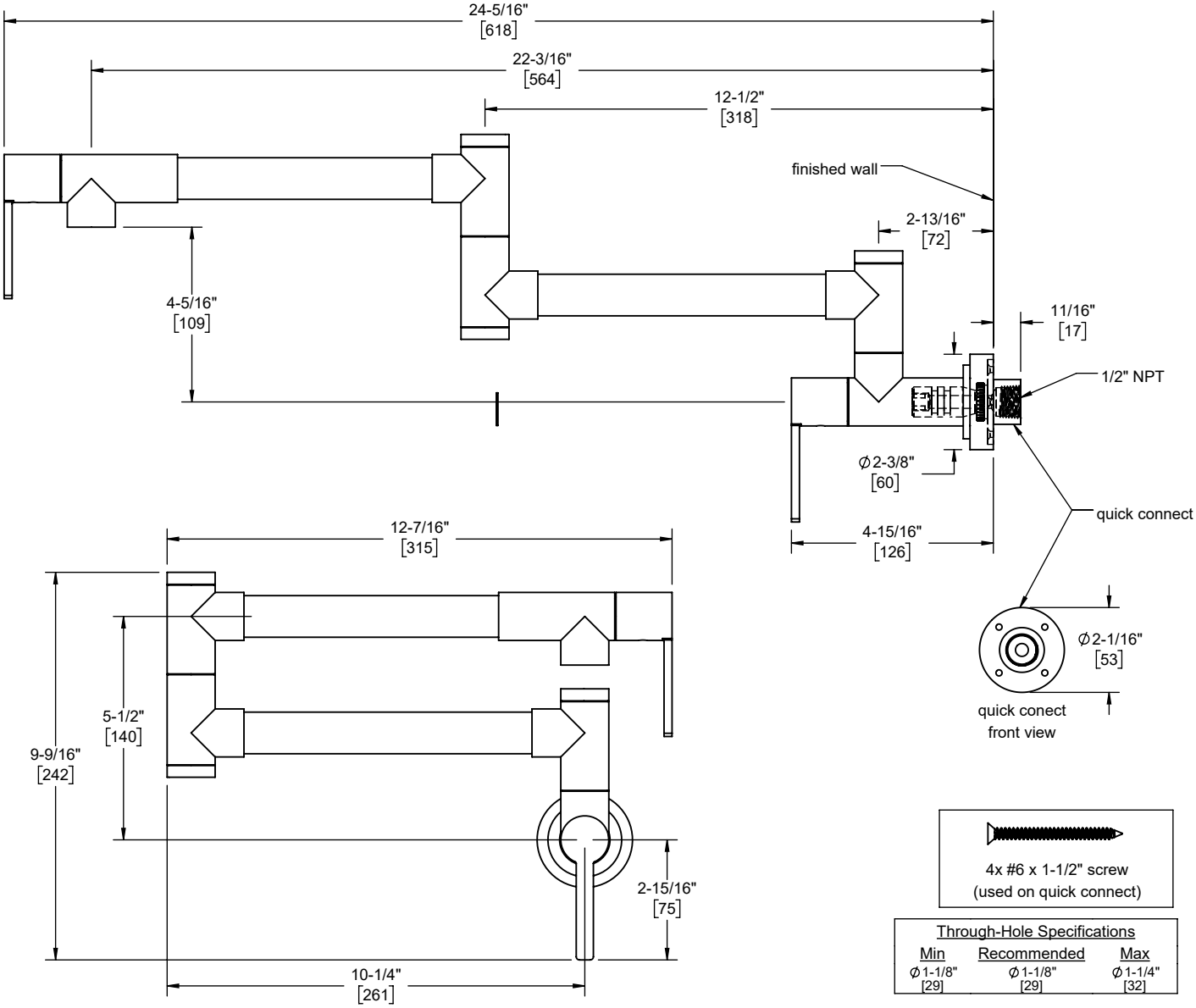

Through-Hole Specifications

Min	Recommended	Max
∅1-1/8" [29]	∅1-1/8" [29]	∅1-1/4" [32]

Dimensions are inches, rounded to 1/16"
[Dimensions in brackets are mm, rounded to 1mm]

Specifications subject to change without notice