DSB45NB

4 1/2"x 4 1/2" x SQUARE CORNERS HINGE
BALL BEARING / NRP / SOLID BRASS

DELTANA

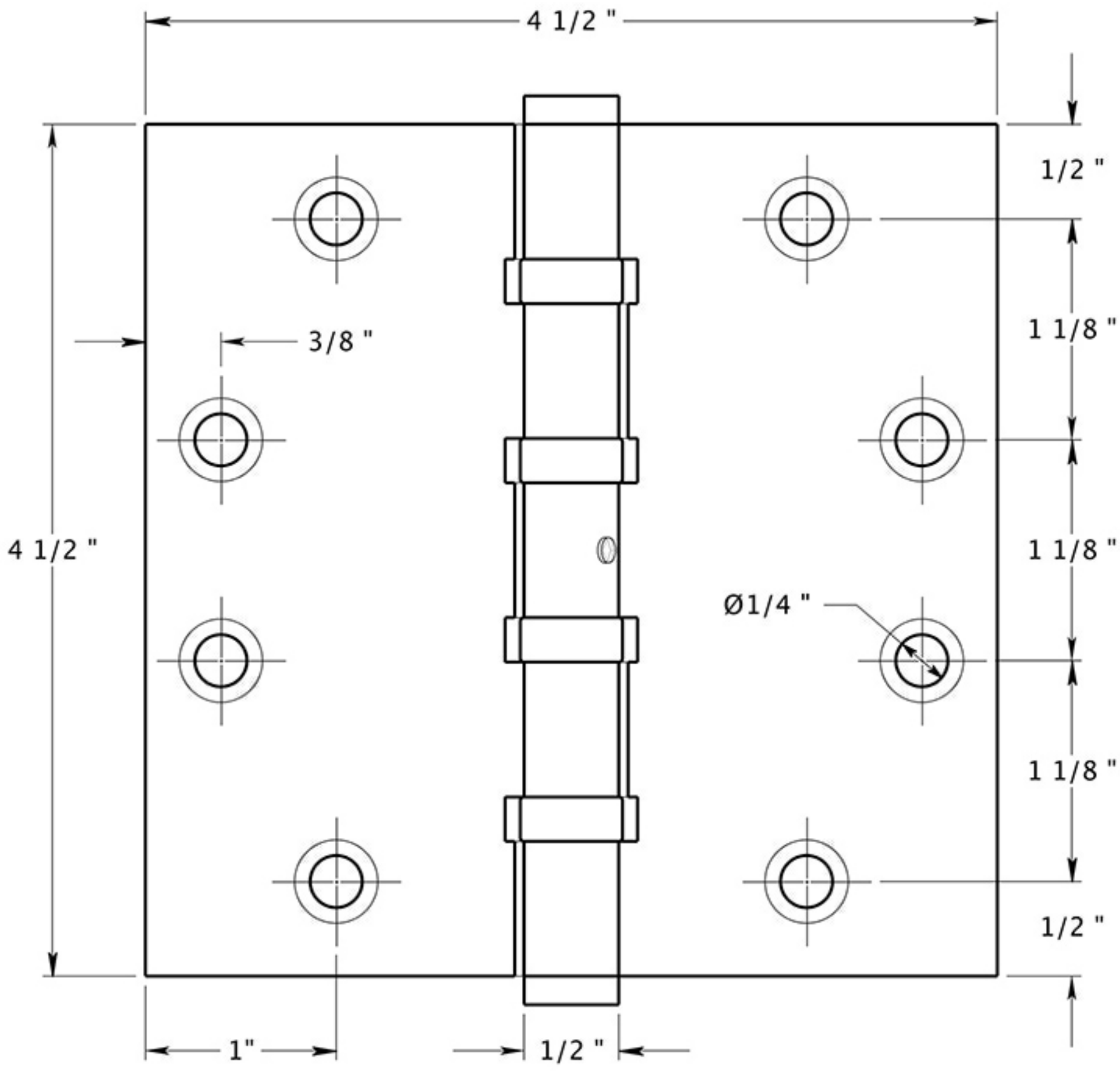

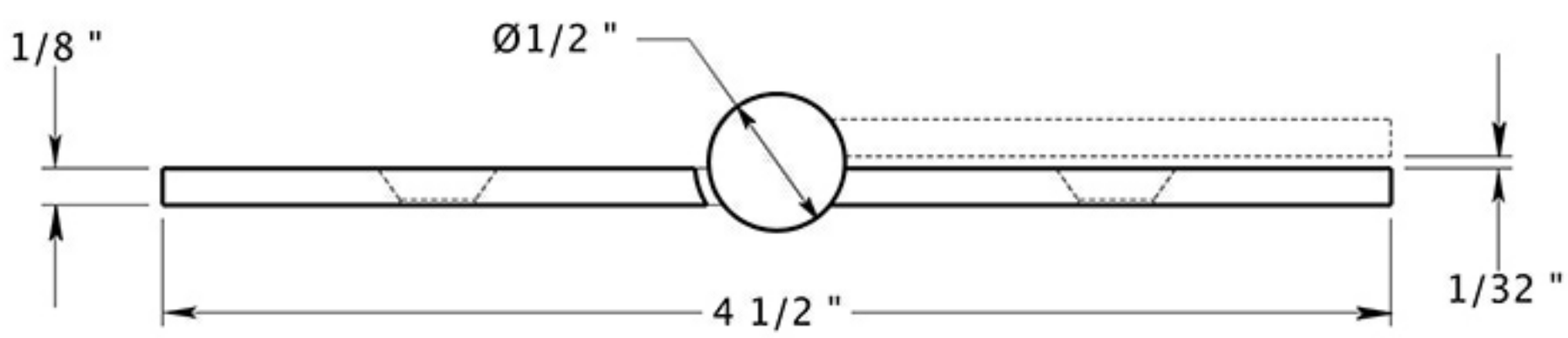

DRAWING NOT TO SCALE

NOTE: Deltana reserves the right to constantly improve its products and is not responsible for differences between the product in-hand and the specifications contained in this drawing. We do not recommend to pre-drill holes or pre-cut woods or metals based on the drawing information if the veracity of the specifications has not been proven by the live product.