PHYLRICH®

Defining Luxury Since 1959

Pressure Balance Shower and Diverter Set (Less Spout)

4-190

TECHNICAL DETAILS

ADA Compliance: No
Access Hole Diameter: 5"
Handle Turn Angle: 115°
Installation Type: Wall Mounted
Primary Material: Brass
Valve Material: Ceramic
Flow Restriction: 1.8 gpm
Water Pressure Maximum: 85 PSI
Water Pressure Minimum: 20 PSI
Water Pressure Recommended: 60 PSI

PRODUCT FEATURES

- Style: Contemporary
- Collection: Basic ll
- Temperature Controlled By Pressure Balance
- Marble Handle

CODES & STANDARDS

ASME A112.181/ CSA B1251, ASME 112.18.2/ CSA B125.2, ANSI NSF, CEC, Watersense 61 Sect. 9, State of MA.

WARRANTY
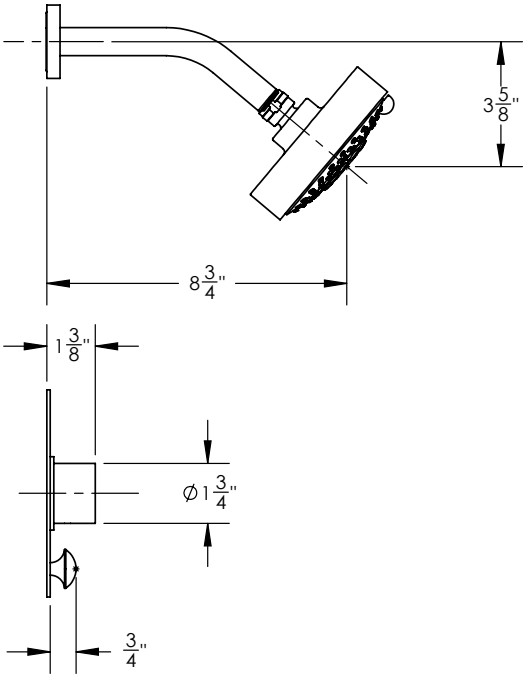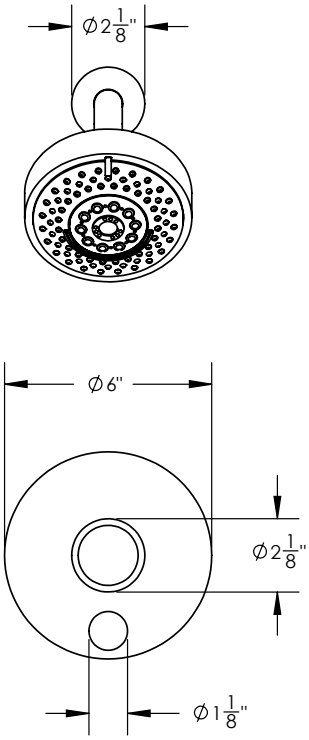
Mechanical Warranty: 10 Years from date of purchase.
Finish Warranty: See catalog for further information.