# WYNDHAM COLLECTION

| | |
|---|---|
| Exterior Size - | 67"L x 29-1/4"W x 28-1/4"H |
| Interior Size - | 44"L x 17-1/2"W x 16-1/2"H |
| Depth at Drain - | 17-3/4" |
| Drain To Overflow - | 13-1/4" |
| Maximum Fill - | 85 Gallons |
| Note - | All Measurements are ± 1/2" |

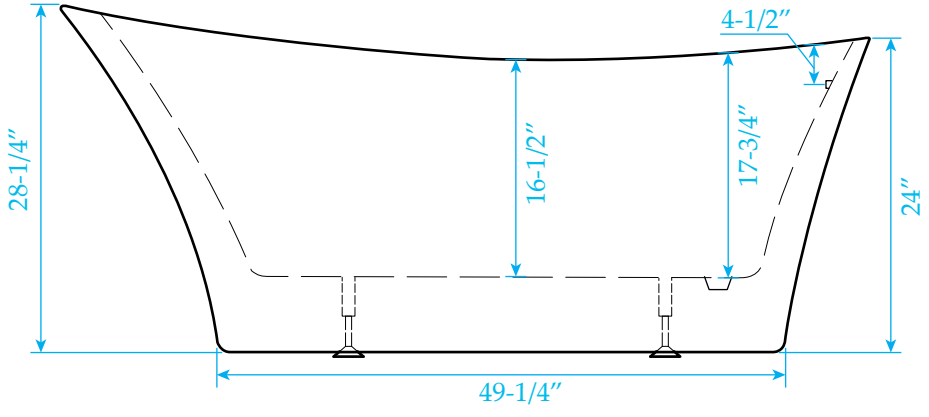


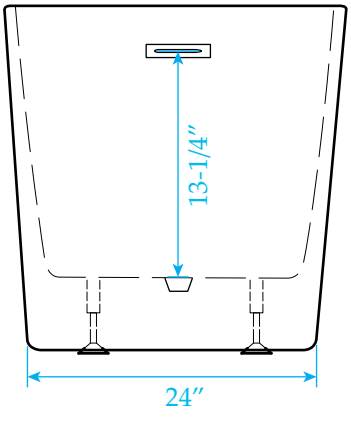


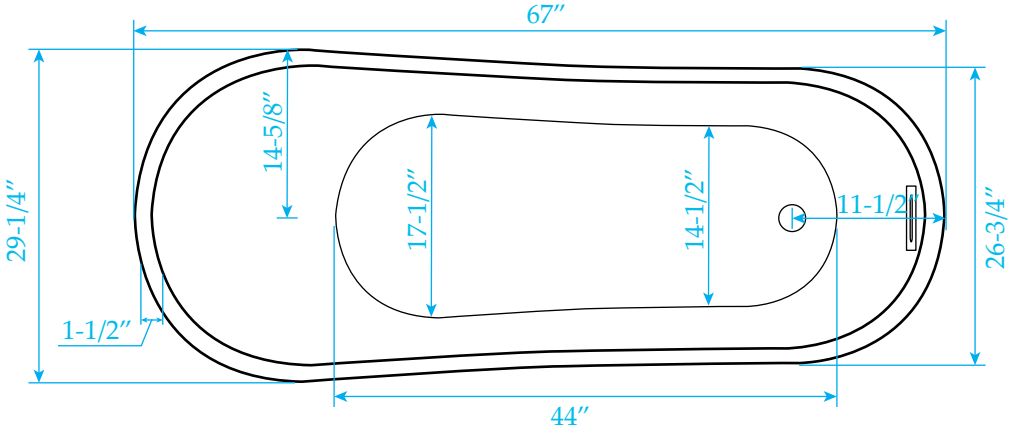


# WC-BTM854-67